TS5160

Installation & User Guide

Compatible Equipment

CPA6 0M - Output Module
9040 - Loudspeaker
DC54/58 - Digital Communicators (Stand Alone Only)

Overview

Introduction

The Intruder Alarm Control Panel TS5160 is provided for domestic and commercial Intruder system conforming to BS4737: part 1: 1986 it is self contained unit with a keypad and liquid crystal display (LCD), its own power supply and an internal battery for operations during a mains failure. In its basic form it will monitor up to eight circuits and will provide alarm outputs but additional equipments may be supplied and fitted as follows:

1. Local Expansion Card (LEC): Each card, which is fitted inside the panel, will provide the facility to monitor four additional circuits so that a total of 16 circuits may be monitored by using two cards.
2. Digicom signalling Interface (DSI): This unit, which is fitted inside the panel, provides a number of facilities including the sending of alarm and status signals over telephone lines to a Central Monitoring Station.
3. Remote Keypad (REM): These units, consisting of a keypad, LCD and sounder, are used at a remote location to control the main panel and up to four REM's may be connected.
4. Output Module (OM): These units may be fitted at a remote location and are used to provide an output to a set of LEDs to indicate circuit activation. Each module will provide up to eight zone indications.
5. Remote Multiplexer (RMX): Fitted at remote locations these units connect circuits that are a long distance from the panel. Up to four units may be connected and each can control up to two circuits.
6. Printer: A printer may be connected to the panel and used to provide a printout of panel activity.

Specification

Input Voltage:	240V +/- 10% 50Hz
Panel Current:	58mA (Set/Unset); 106mA (Alarm)
REM Current:	21mA (Set/Unset); 43mA (Alarm)
Battery:	12V 6Ah
Zones:	8 (standard); 16 using LEC and/or RMX
Panel Dimensions	(w x h x d): 357 x 267 x 85mm or 95mm from Apr 90
Panel weight	3.4 kg
REM Dimensions	(w x h x d): 170 x 115 x 40mm
REM Weight:	0.4 kg
Environment:	0 - 55 deg C

System Schematic Block Diagram

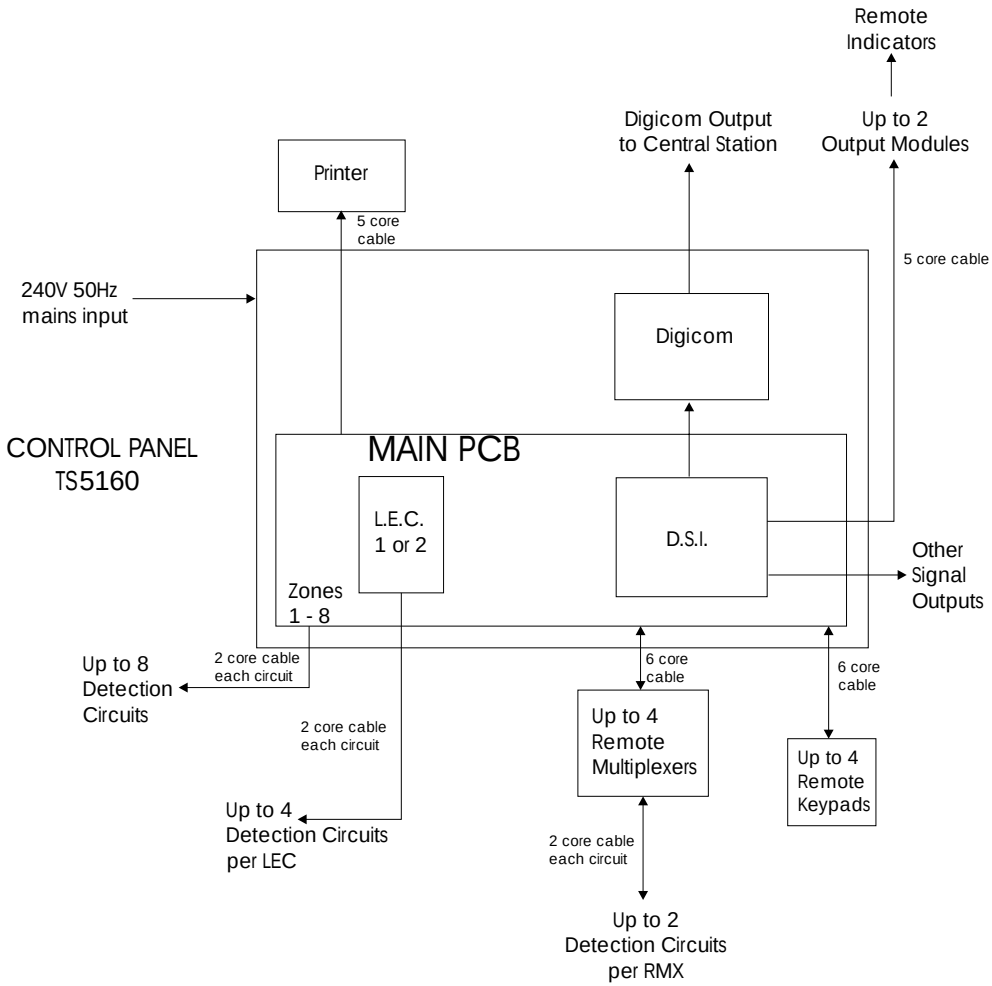

Figure 1 Control Panel TS5160 - System Schematic Block Diagram

Installing Detection and Tamper Circuits

The Detection Circuits are wired as EOLR (End of line Resistor)

EOLR System (Fig 2)

1 Detector devices have normally closed contacts with a 4k7 shunt resistor;

2 Tamper devices have normally closed contacts with no shunt resistor;

3 A 2K2 End of Line (EOL) resistor must be fitted at the point in the circuit furthest from the control panel;

4 Loop resistance with the EOL resistor shorted must be less than 100 Ohms;

5 The maximum number of devices allowed in a circuit is ten;

6 A normally open device, such as a Pressure Pad or Exit Terminator switch, may also be connected as shown;

7 Fit 2k2 resistor to any unused circuits.

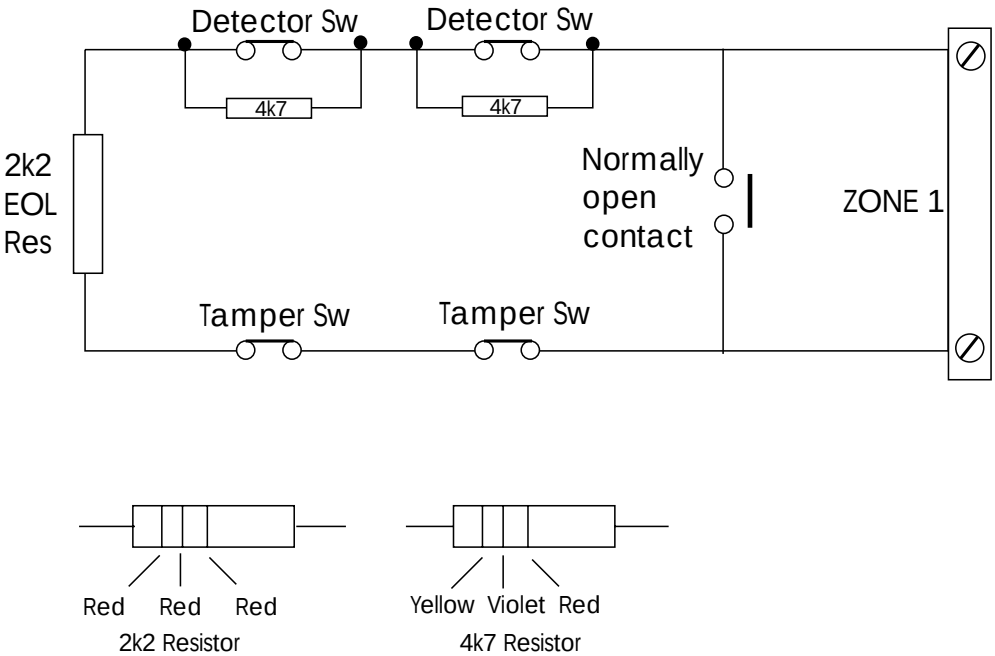

Figure 2 EOLR Circuit Connections

System Installation

Panel Connections

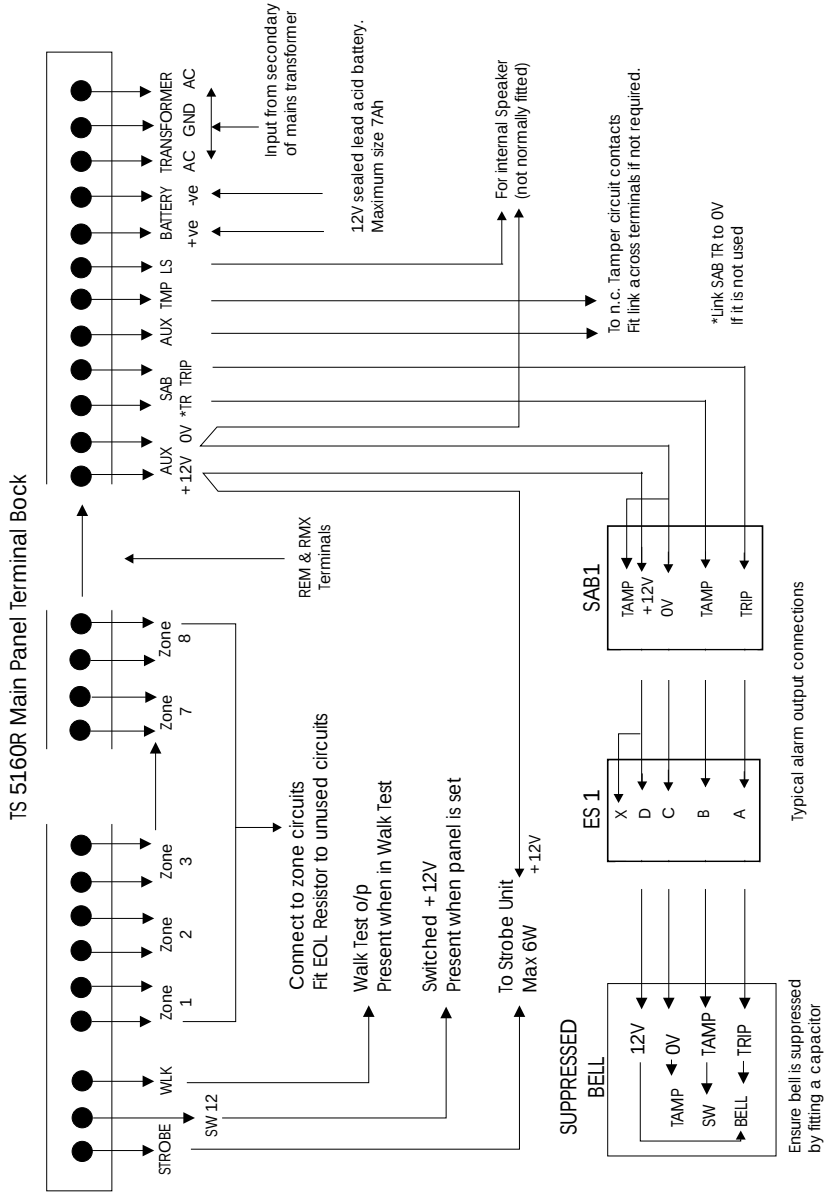

Figure 3 Typical Alarm Output Connections

REM and RMX Connections

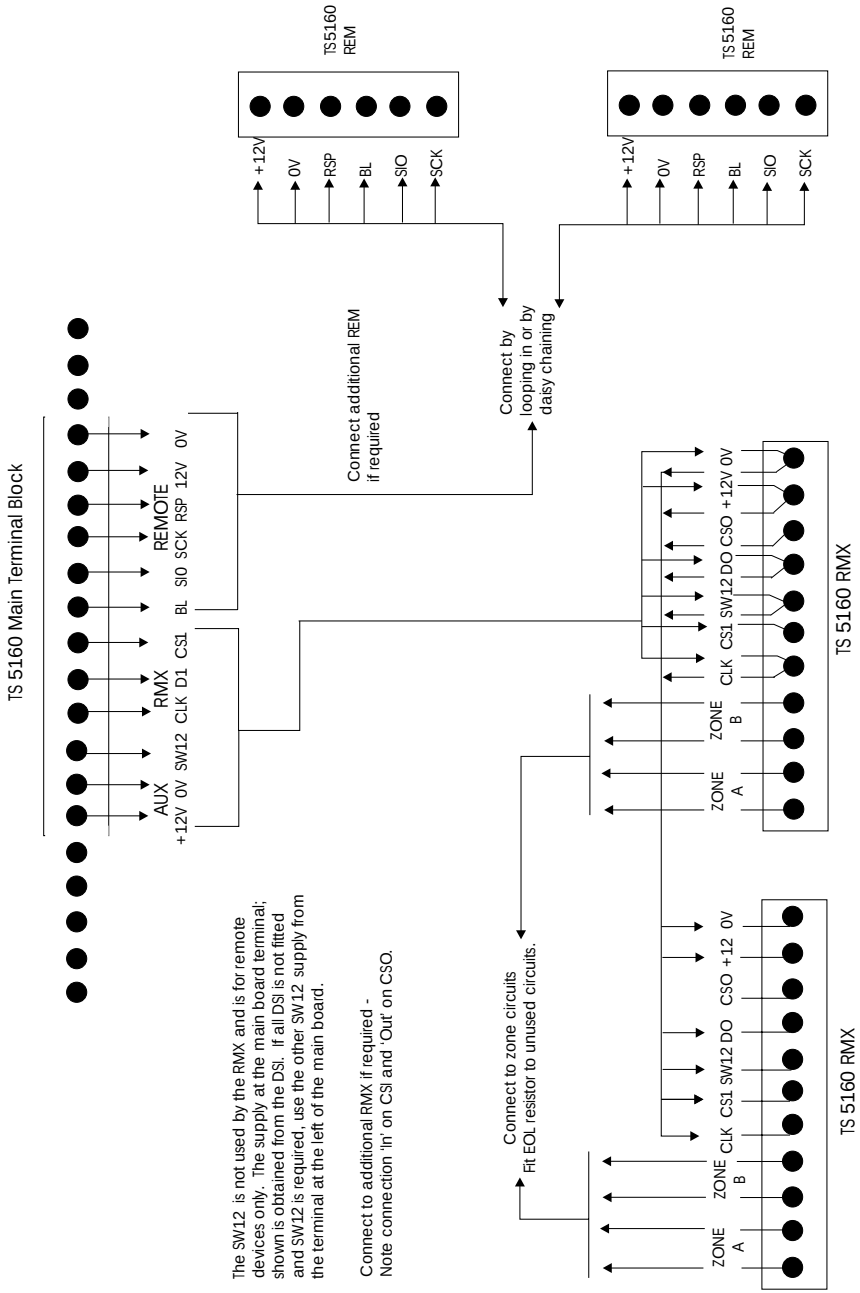

Figure 4 REM and RMX Connections

Commissioning The Panel

Memory Default Values

When a panel is supplied from the factory the memory data default parameters are set to:

Circuits 01 - 05	Night
Circuit 06	Last Exit
Circuit 07	Exit Terminator
Circuit 08	Personal Attack
Circuit 09 - 16	Not Applicable (N/A)
Codes	Four Digits
System Reset	By User
System Re-arm	Manual
PA Alarm	Audible
Full Set	By Circuit
Part Set	By Circuit
Circuit Used	Last Exit
Entry Time	20 seconds
Exit Time	20 seconds
Bell Delay	5 minutes
Bell Duration	20 minutes
Double Knock Window	00 seconds
Engineer's Code	9999 (00)
Master User's Code	1111 (00)
Ordinary User's Codes	Not Defined

NOTE: THESE DEFAULTS MAY ALSO OCCUR IF LINK 3 ON THE MAIN PCB IS CLOSED

Key Functions

Engineer's Reset

1. Enter engineer's code default 9999. You are now in engineer's mode.

2. Press 0 to quit to the unset mode.

Loading Defaults

1. Power down mains and battery

2. Short Link 3

3. Power up battery and mains

4. Remove short on Link 3

5. Enter 9999

6. The panel is now back to Factory Defaults

Bell Test/Walk Test

Please refer to page 11 step 4.5.3 & 4.5.4 respectively.

Reference Messages

Display and Printer Text

A.C. 01	AC Supply failure detected
ALRM XX	Circuit XX (Night or 24 Hour circuit) caused an alarm
Aux XX	Auxiliary circuit XX was activated
AUX TMP	Tamper detected by Auxiliary circuit
CLK SET	The real time clock was altered
DC 01	Low internal dc operating voltage detected
ENT T/O	Entry time-out
Empty	No event
FIRE XX	Fire circuit XX was activated
LINE FT	Line fault from Signalling device (Digicom) detected
OMIT XX	Circuit XX was omitted prior to setting
OPEN XX	System was opened (unset) by User XX
PA C: xx	P.A. Circuit XX was activated
PA U: XX	Duress code entered by User XX
PAD TMP	Key pad tamper (too many invalid codes entered)
P/mod XX	The Part Set mode was altered by User XX
P/SET XX	System was Part Set by User XX
REM TMP	Remote Keypad box tamper
Reset 01 - 03	System reset 01, 02 or 03 has occurred
SET XX	System was Set by User XX
SET ERR	An attempt to Set the panel failed
TAMP XX	Tamper condition detected on circuit XX
TEST XX	Circuit on test XX was activated
TEST T/O	Entry time-out caused by last exit circuit on test.

Display Text for Circuit Definitions and Loop Conditions

NIGHT	Standard NIGHT circuit
24-HR	24 Hour circuit
EX-TR	Exit Terminator circuit
LT-EX	Last Exit circuit
P.A.	Personal Attack circuit
FIRE	Fire detector circuit
AUX	Auxiliary circuit
N/A	Not applicable - circuit disabled.
Shorted	Circuit is short-circuited
Healthy	Circuit has all its contacts closed and no faults
Active	Circuit has a contact open
Active +	Circuit has more than one contact open
Tamper	Circuit is open-circuited. Tamper alarm.

Display Text for Advisory messages

TEST CCT FAILURE	Circuit on 14 day test has been activated
LINE FAULT	There is a (DSI) line fault condition present
NEEDS ENGR RESET	The system needs to be reset by a qualified engineer
UNHEALTHY CCTS	One or more circuits is in a Not Healthy condition
SYSTEM IN USE	The system is being used at another position (REM).

Programming the Panel

Programming In Flow Chart Configuration

Engineer's Menu Mode Actions

STEP	ACTION	DISPLAY	REMARKS
4.3.1	Initial Power Up		
1	Apply power	Reset 01 Mon 00:00	Assuming no faults. Sounder on
2	Enter Code	> > > >	Use code 9999
3	----	Reset 01 Mon 00:00	Sounder stopped
4.3.2	Entering Circuit Definitions and Attributes		
1	Enter Code	> > > >	Use 9999
2	----	DEFINE CCTS?	Press No for next Menu or 0 to quit
3	YES	01<NIGHT * * *	First circuit to be set
4	YES	02<NIGHT * * *	Definitions and Attributes correct: go to next circuit
	(or) NO	01>NIGHT * * *	Definition and/or Attributes to be changed
5	NO or YES	01 (definition)> * * *	Use NO until required Definition is obtained then YES
6	NO or YES	01 (definition) T> * *	Use NO until required Attribute is obtained then YES
7	NO or YES	01 (definition) T/* D/* A/*	Final Attribute set
8	YES	02<NIGHT * * *	Next circuit. Repeat steps 3 to 7 until all circuits have the required Definitions and Attributes. Press YES after circuit 16 or 0 to quit.
9	(final) YES or 0	DEFINE CCTS?	Process complete. Press NO for next Menu

* = no Attribute entered. / = either symbol displayed

NOTE: TO QUIT MEANS TO RETURN TO THE UNSET CONDITION

Circuit Definitions

The following definitions may be allocated to the circuits:

(1) NIGHT
(2) 24 HOUR
(3) LAST EXIT (LT-EX)
(4) EXIT TERMINATOR (EX-TR)
(5) PERSONAL ATTACK (PA)
(6) FIRE
(7) AUXILIARY (AUX)
(8) NOT APPLICABLE (N/A)

Attributes

The following Attributes may be allocated:

(1) Test
(2) Double Knock
(3) Access

Engineer's Menu Mode Actions

STEP	ACTION	DISPLAY	REMARKS
4.3.5	Entering Times		
1	----	DEFINE CCTS?	From para 4.3.2
2	NO	ALTER TIMERS?	Press NO for next Menu or 0 to quit
3	YES	ENTRY < 20 sec	Use YES or NO and figures to set required times. Finish with YES.
4	YES	EXIT < 20 sec	Use YES or NO and figures to set required times. Finish with YES.
5	YES	BELL DEL <5 min	As above for Entry Timer
6	YES	BELL DUR< 20 min	As above for Entry Timer
7	YES	2 KNOCK< 00 sec	As above for Entry Timer
8	YES	ALTER TIMERS?	Press NO for next menu or 0 to quit
4.3.6.	Entering System Modes		
1	----	ALTER TIMERS?	From para 4.3.5
2	NO	SYSTEM MODES?	Press NO for next Menu or 0 to quit
3	YES	CODES >4 digits	Press NO for 6 digits and YES to accept
4	YES	RESET By User	Press NO for Reset by Engineer and YES to accept
5	YES	RE-ARM >Manual	Press NO for Re-arm Auto and YES to accept
6	YES	PA ALM > Audible	Press NO for PA alarm silent and YES to accept
7	YES	F/SET >by cct	Press NO for Full Set Timed and YES to accept
8	YES	P/SET >by cct	Press NO for Part Set Timed and YES to accept
9	YES	By CCT >LT-EX	Press No for Exit by Exit Terminator and YES to accept
10	YES	SYSTEM MODES?	Press No for next Menu or 0 to quit

Timers

The following timers may be set

(1) Exit Timer
(2) Entry Timer
(3) Bell Delay Timer
(4) Bell Duration Timer
(5) Double Duration Timer

NOTES:

(1) After setting the required digits on each timer, using the NO key, will toggle between minutes and seconds.
(2) Timer accuracy is + or - 1 digit. Hence to set a time of one minute use 60 seconds to prevent the timer possibly giving a time of 0 minutes.
(3) Do not set an entry time of 60 to 99 secs inclusive for units prior to Oct 89.

Engineer's Menu Mode Actions

STEP	ACTION	DISPLAY	REMARKS
4.5.1	See Log		
1	----	SYSTEM MODES?	From para 4.3.6
2	NO	SET PANEL?	Press 0 to quit
3	NO	SEE LOG?	Press NO to next menu or 0 to quit
4	YES	Event Day Time	Most recent event. Press YES after each event or Press NO to re-start
5	YES or NO	SEE LOG?	Press NO for next menu or 0 to quit
4.5.2	View Circuits		
1	----	SEE LOG?	From para 4.5.1
2	NO	View CCTS?	Press NO for next menu or 0 to quit
3	YES	01 (definition status)	First Circuit status. Press YES afer each circuit is displayed or NO to re-start
4	YES or NO	VIEW CCTS?	Press NO for next menu or 0 to quit
4.5.3	Walk Test		
1	----	VIEW CCTS?	From para 4.5.2
2	NO	WALK TEST?	Press NO for next menu or 0 to quit
3	YES	ANY KEY TO END	Activate circuits
4	Press Key	TESTED: (detail)	NONE displayed if no circuit activated
5	YES or No	WALK TEST?	Press NO for next menu or 0 to quit
4.5.4.	Bell Test		
1	----	WALK TEST?	From para 4.5.3
2	NO	BELL TEST?	Press NO for next menu or 0 to quit
3	YES	ANY KEY TO END	Bells sounding
4	Press Key	BELL TEST?	Bells stopped. Press NO for next menu or 0 to quit

NOTE: TO QUIT MEANS TO RETURN TO THE UNSET CONDITON

Engineer's Menu Mode Action

STEP	ACTION	DISPLAY	REMARKS
4.5.5	Chime Circuits		
1	----	BELL TEST?	From Para 4.5.4
2	NO	CHIME CCTS?	Press NO for next menu or 0 to quit
3	YES	XX (definition) >Silent Chimed?	Press YES or NO to make circuits chime or remain silent when activated
4	YES or No	CHIME CCTS?	Press NO for next menu or 0 to quit
4.5.6	Set Mute		
1	----	CHIME CCTS?	From para 4.5.5
2	NO	SET MUTE?	Press NO for next menu or 0 to quit
3	YES	SOUNDS >Loud muted?	Press YES or NO to select loud or muted
4	YES	SET MUTE?	Press NO for next menu or 0 to quit
4.5.7	Use Printer (if fitted)		
1	----	SET MUTE?	From para 4.5.6
2	NO	USE PRINTER?	Press No for next menu or 0 to quit
3	YES	SYSTEM PRINT?	Press YES to print or NO to continue
4	YES or NO	PRINT LOG?	Press YES to print or NO to continue
5	YES or NO	ALTER CLOCK? USE PRINTER?	Log printed then Alter Clock displayed Press NO for next menu or 0 to quit
4.5.8	Alter Clock		
			From para 4.5.7
1	----	USE PRINTER?	Press NO for next menu or 0 to quit
2	NO	ALTER CLOCK?	Press NO for next menu or 0 to quit
3	YES	Day hh:mm:ss	Enter YES or NO and numerals to set day and time
4	YES	ALTER CLOCK?	After setting seconds. Press NO for next menu or 0 to quit.

Engineer's Menu Mode Actions

STEP	ACTION	DISPLAY	REMARKS
4.5.9	Engineer's Passwork Codes		
1	----	ALTER CLOCK?	From para 4.5.8
2	NO	SET CODES?	Press NO for next menu or 0 to quit
3	YES	NEW CODE =	Enter new code
4	XXXX(XX)	NEW CODE = XXXX (XX)	Codes will not be accepted if the number is used already
5	YES	SET CODES?	Only displayed if the new code is accepted. If NOT accepted then display shows NEW CODE =
4.5.10	Part Set Circuits		
1	----	SET CODES?	From para 4.5.9
2	NO	P/SET CCTS?	Press NO to go to para 4.3.5 or 0 to quit
3	YES	XX (Definition) > Armed (or Omit)	Press YES to accept Armed or NO to select Omit then YES.
4	YES	User Omitting?	After final circuit available. Press YES or NO to allow Master to change Part Set and User to Omit.
5	YES or NO	P/SET CCTS?	Press NO to return to para 4.3.5 or 0 to quit.

Users Menu Mode Operations (General)

STEP	ACTION	DISPLAY	REMARKS
	See Log		
1	Enter Password	> > > >	Code not displayed
2	------	SET PANEL?	Press 0 to quit
3	NO	SEE LOG?	Press 0 to quit
4	YES	Event Day Time	Most recent event. Press YES after each event or press NO then 0 to quit.
5	Press 0	UNSET Day hh:mm	See Note p14 regarding Chime_
	View Circuits		
1	Enter Password	> > > >	Code not displayed
2	------	SET PANEL?	Press 0 to quit
3	NO	SEE LOG?	Press 0 to quit
4	NO	VIEW CCTS?	Press 0 to quit
5	YES	01 (definition) status	First circuit status. Press YES after each circuit is displayed or NO then 0 to quit
6	Press 0	UNSET Day hh:mm	See Note p14 regarding Chime
	Walk Test		
1	Enter Password	> > > >	Code not displayed
2	-----	SET PANEL?	Press 0 to quit
3-5	Press NO 3 times	WALK TEST?	Press NO at unwanted operations or press 0 to quit
6	YES	ANY KEY TO END	Activate circuits
7	Press key	TESTED: (detail)	NONE displayed if no circuit activated
8	Press 0	UNSET Day hh:mm	See Note p14 regarding Chime

NOTE: The general procedure for selecting operations is similar to that shown previously - enter the password then press NO until the required operation is reached.

On leaving the Menu Mode and Unsetting, if any circuits are selected to Chime then CHIME ON will be displayed. Press YES or NO as required.

Users Menu Mode Operations (Cont'd)

STEP	ACTION	DISPLAY	REMARKS
	Bell Test		
1	Enter Password	> > > >	Code not displayed
2	------	SET PANEL?	Press 0 to quit
3 - 6	Press NO 4 times	BELL TEST?	Press NO at unwanted operations or press 0 to quit
7	YES	ANY KEY TO END	Bells sounding
8	Press key	BELL TEST?	Bells stopped.
9	Press 0	UNSET Day hh:mm	See Note above regarding Chime
	Chime Circuits		
1	Enter Password	> > > >	Code not displayed
2	------	SET PANEL?	Press 0 to quit
3 - 7	Press NO 5 times	CHIME CCTS?	Press NO at unwanted operations or press 0 to quit
8	YES	XX (definition) > Silent Chimed?	Press YES or NO to make circuits chime or remain silent when activated
9	YES or NO	CHIME CCTS?	Press 0 to quit
10	Press 0	UNSET Day hh:mm	See Note above regarding Chime
	Set Mute		
1	Enter Password	> > > >	Code not displayed
2	-----	SET PANEL?	Press 0 to quit
3-8	Press NO 6 times	SET MUTE?	Press NO at unwanted operations or press 0 to quit
9	YES	SOUNDS > loud muted?	Press YES or NO to select loud or muted
10	YES	SET MUTE	Press 0 to quit
11	Press 0	UNSET Day hh:mm	See Note above regarding Chime

Users Menu Mode Operations (Master)

NOTE: The following can only be carried out by the Master User. The User Printer operation is only displayed if a printer is fitted and Part Set Circuits is only possible if the User Omitting option has been enabled by the engineer.

STEP	ACTION	DISPLAY	REMARKS
	User Printer		
1	Enter Password	> > > >	Code not displayed
2	------	SET PANEL?	Press 0 to quit
3 - 9	Press NO 7 times	USE PRINTER?	Press NO at unwanted operations or press 0 to quit
10	YES	SYSTEM PRINT?	Press YES to print or NO to continue
11	YES or NO	PRINT LOG?	Press YES to print or NO to continue
12	YES	ALTER CLOCK?	Log printed then Alter Clock displayed
	OR NO	USE PRINTER?	PRESS 0 to quit
13	Press 0	UNSET Day hh:mm	See Note p14 regarding Chime
	Alter clock		
1	Enter Password	> > > >	Code not displayed
2	------	SET PANEL?	Press 0 to quit
3 - 10	Press NO 8 times	ALTER CLOCK?	Press NO at unwanted operations or press 0 to quit
11	YES	Day hh:mm:ss	Enter YES or NO and numerals to set day and time
12	YES	ALTER CLOCK	After setting seconds
13	Press 0	UNSET Day hh:mm	See Note p14 regarding Chime
	Set Password Codes		
1	Enter Password	> > > >	Code not displayed
2	-----	SET PANEL?	Press 0 to quit
3 - 11	Press NO 9 times	SET CODES?	Press NO at unwanted operations or press 0 to quit
12	YES	USER 1-4 DEL = 5	Enter user number then new code.Enter 5 to delete codes 2 to 4
13	(User) X	NEW CODE =	User number not shown
14	XXXX(XX)	NEW CODE = XXXX(XX)	Codes will not be accepted if the number is used already
15	YES	SET CODES?	Only displayed if the new code is accepted. If NOT accepted then display shows NEW CODE = Repeat steps 12-15 if required
16	Press 0	UNSET Day hh:mm	See Note p 14 regarding Chime
	Part Set Circuits (only if this option is enabled)		
1	Enter Password	> > > >	Code not displayed
2	------	SET PANEL?	Press 0 to quit
3 - 12	Press NO 10 times	P/SET CCTS?	Press NO at unwanted operations or press 0 to quit
13	YES	XX (Definition) > Armed (or Omit)	Press YES or NO to accept Armed or Omit
14	YES	P/SET CCTS?	After final circuit available
15	Press 0	UNSET Day hh:mm	See Note p14 regarding Chime

This page intentionally left blank